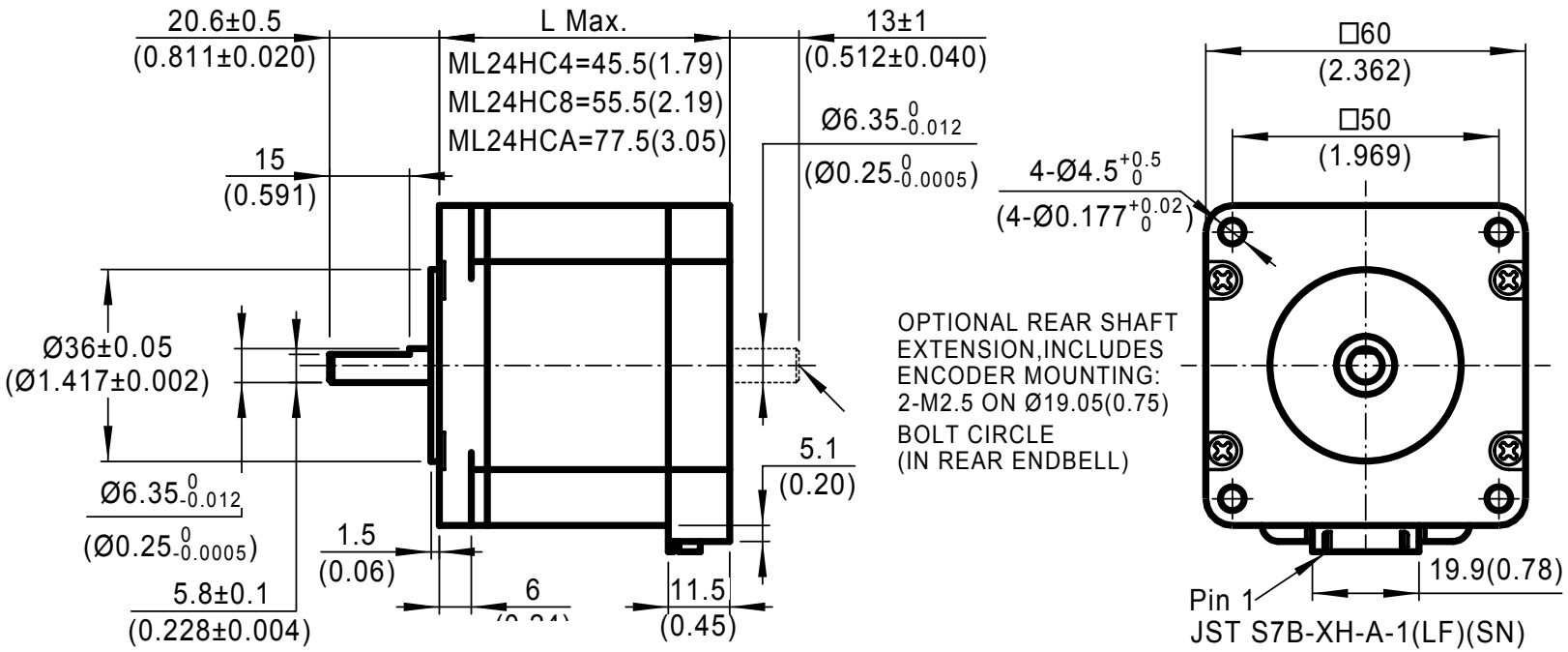
20.6±0.5
(0.811±0.020)
L Max.
ML24HC4=45.5(1.79)
ML24HC8=55.5(2.19)
ML24HCA=77.5(3.05)
13±1
(0.512±0.040)
Ø6.35 0 -0.012
(Ø0.25 0 -0.0005)
15
(0.591)
Ø36±0.05
(Ø1.417±0.002)
Ø6.35 0 -0.012
(Ø0.25 0 -0.0005)
5.8±0.1
(0.228±0.004)
1.5
(0.06)
6
11.5
(0.45)
5.1
(0.20)
□60
(2.362)
□50
(1.969)
4-Ø4.5 +0.5 0
(4-Ø0.177 +0.02 0)
OPTIONAL REAR SHAFT
EXTENSION,INCLUDES
ENCODER MOUNTING:
2-M2.5 ON Ø19.05(0.75)
BOLT CIRCLE
(IN REAR ENDBELL)
19.9(0.78)
Pin 1
JST S7B-XH-A-1(LF)(SN)

ML24HC