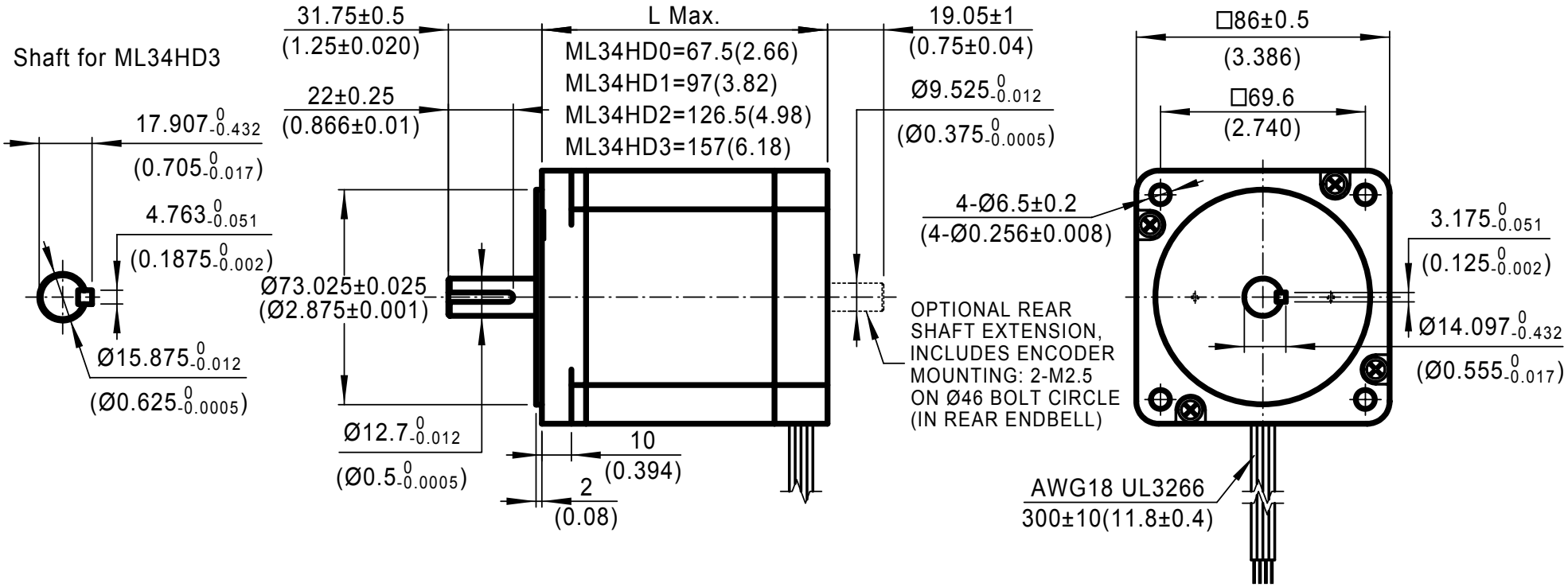
Shaft for ML34HD3
17.907 0 -0.432
(0.705 0 -0.017)
4.763 0 -0.051
(0.1875 0 -0.002)
Ø15.875 0 -0.012
(Ø0.625 0 -0.0005)
31.75±0.5
(1.25±0.020)
22±0.25
(0.866±0.01)
Ø73.025±0.025
(Ø2.875±0.001)
Ø12.7 0 -0.012
(Ø0.5 0 -0.0005)
L Max.
ML34HD0=67.5(2.66)
ML34HD1=97(3.82)
ML34HD2=126.5(4.98)
ML34HD3=157(6.18)
10
(0.394)
2
(0.08)
19.05±1
(0.75±0.04)
Ø9.525 0 -0.012
(Ø0.375 0 -0.0005)
OPTIONAL REAR
SHAFT EXTENSION,
INCLUDES ENCODER
MOUNTING: 2-M2.5
ON Ø46 BOLT CIRCLE
(IN REAR ENDBELL)
□86±0.5
(3.386)
□69.6
(2.740)
4-Ø6.5±0.2
(4-Ø0.256±0.008)
3.175 0 -0.051
(0.125 0 -0.002)
Ø14.097 0 -0.432
(Ø0.555 0 -0.017)
AWG18 UL3266
300±10(11.8±0.4)

ML34HD